4E27/8001

TRANSMITTING BEAM POWER AMPLIFIER

GENERAL DATA

Electrical:

Filament, Thoriated Tungsten:		
Voltage	5.0	a-c or d-c volts
Current	7.5	amp.
Transconductance for plate current of 75 ma.	2800	μmhos
Direct Interelectrode Capacitances:		
Grid to Plate	0.06	μμf
Input	12	μμf
Output	6.5	μμf

Physical:

Overall Length	5-15/16" ± 1/4"
Seated Length	5-5/16" ± 1/4"
Maximum Diameter	2-11/16"
Mounting Position	Vertical Only: Base up or down
Bulb	T-21
Base	Medium Metal Shell Giant 7-Pin, Bayonet
Basing Designation for BOTTOM VIEW	7BM

Pin 1 - Filament
Pin 2 - Grid No.3
Pin 3 - Grid No.2
Pin 4 - Grid No.1
Pin 5 - Grid No.3
Pin 6 - Grid No.2

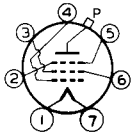

Pin 7 - Filament
Bulb } - Plate
Ter- } - Plate
minal
Base } - Internal
Shell } - Shield

A-F POWER AMPLIFIER & MODULATOR - Class A_1

Maximum Ratings, *Absolute Values*:

D-C PLATE VOLTAGE	2000 max.	volts
D-C SCREEN VOLTAGE (Grid No.2)	750 max.	volts
D-C PLATE CURRENT	150 max.	ma.
D-C SCREEN CURRENT	40 max.	ma.
PLATE INPUT	75 max.	watts
SCREEN INPUT	30 max.	watts
PLATE DISSIPATION	75 max.	watts

Typical Operation:

D-C Plate Voltage	500	1000	volts
D-C Suppressor Voltage (Grid No.3)◊	60	0	volts
D-C Screen Voltage	500	300	volts
D-C Grid Voltage (Grid No.1) *, #	-47	-27	volts
Peak A-F Grid Voltage	47	27	volts
D-C Plate Current	150	75	ma.
D-C Screen Current	10	5	ma.
Load Resistance	2600	12000	ohms
Power Output	30	34	approx. watts

*; #: See next page. ◊ : See end of tabulation. ◄ Indicates a change.

4E27

TRANSMITTING BEAM POWER AMPLIFIER

(continued from preceding page)

SUPPRESSOR-MODULATED R-F POWER AMPLIFIER – Class C Telephony

Carrier conditions per tube for use with a max. modulation factor of 1.0

Maximum Ratings, *Absolute Values*:

D-C PLATE VOLTAGE	2000 max.	volts
D-C SUPPRESSOR VOLTAGE (Grid No.3)	-500 max.	volts
← D-C SCREEN VOLTAGE (Grid No.2)	600 max.	volts
D-C GRID VOLTAGE (Grid No.1)	-500 max.	volts
D-C PLATE CURRENT	100 max.	ma.
← D-C GRID CURRENT	25 max.	ma.
PLATE INPUT	110 max.	watts
← SCREEN INPUT	27 max.	watts
PLATE DISSIPATION	75 max.	watts

← Typical Operation:

D-C Plate Voltage	1500	2000	volts
D-C Suppressor Voltage◊	-210	-300	volts
D-C Screen Voltage**	500	600	volts
	22000	30000	ohms
D-C Grid Voltage	-130	-130	volts
Peak A-F Suppressor Voltage	210	300	volts
Peak R-F Grid Voltage	195	150	volts
D-C Plate Current	70	55	ma.
D-C Screen Current	44	45	ma.
D-C Grid Current	8	3	approx. ma.
Driving Power°	1.4	0.4	approx. watts
Power Output	33	35	approx. watts

* For a-c filament supply.

◊ Obtained from fixed supply or by cathode resistor. The d-c resistance in the grid circuit should not exceed 50000 ohms with fixed bias, or 500000 ohms with cathode bias.

**Obtained preferably from plate-voltage supply through series resistor of value shown.

° At crest of a-f cycle with modulation factor of 1.0.

PLATE-MODULATED R-F POWER AMPLIFIER – Class C Telephony

Carrier conditions per tube for use with a max. modulation factor of 1.0

Maximum Ratings, *Absolute Values*:

← D-C PLATE VOLTAGE	3000 max.	volts
← D-C SCREEN VOLTAGE (Grid No.2)	600 max.	volts
D-C GRID VOLTAGE (Grid No.1)	-500 max.	volts
D-C PLATE CURRENT	135 max.	ma.
← D-C SCREEN CURRENT	30 max.	ma.
D-C GRID CURRENT	25 max.	ma.
← PLATE INPUT	250 max.	watts
← SCREEN INPUT	18 max.	watts
PLATE DISSIPATION	65 max.	watts

← Indicates a change.

4E27

TRANSMITTING BEAM POWER AMPLIFIER

(continued from preceding page)

Typical Operation:

D-C Plate Voltage	1500	2500	volts
D-C Suppressor Voltage(Grid No.3)◇	60	60	volts
D-C Screen Voltage ##	600	600	volts
	82000	240000	ohms
D-C Grid Voltage***	-200	-200	volts
	145000	330000	ohms
	110000	250000	ohms
	310	450	ohms
Peak R-F Grid Voltage	255	220	volts
D-C Plate Current	135	100	ma.
D-C Screen Current	11	8	ma.
D-C Grid Current	1.4	0.6	approx. ma.
Driving Power	0.4	0.1	approx. watt
Power Output	145	200	approx. watts

Obtained preferably from modulated fixed supply. May also be obtained from modulated plate-voltage supply through series resistor of values shown.

***Obtained from fixed supply, grid resistor (145000,330000), or combination of cathode resistor (310,450) and grid resistor (110000,250000).

R-F POWER AMPLIFIER & OSCILLATOR - Class C Telegraphy

Key-down conditions per tube without modulation▲

Maximum Ratings, ***Absolute Values:***

D-C PLATE VOLTAGE	4000 max.	volts
D-C SCREEN VOLTAGE (Grid No.2)	750 max.	volts
D-C GRID VOLTAGE (Grid No.1)	-500 max.	volts
D-C PLATE CURRENT	150 max.	ma.
D-C SCREEN CURRENT	30 max.	ma.
D-C GRID CURRENT	25 max.	ma.
PLATE INPUT	300 max.	watts
SCREEN INPUT	25 max.	watts
PLATE DISSIPATION	75 max.	watts

Typical Operation:

D-C Plate Voltage	2000	3000	volts
D-C Suppressor Voltage (Grid No.3)◇	0	60	volts
D-C Screen Voltage△	750	750	volts
	70000	280000	ohms
D-C Grid Voltage□	-200	-200	volts
	300000	---	ohms
	1200	1800	ohms
Peak R-F Grid Voltage	225	170	volts
D-C Plate Current	150	100	ma.
D-C Screen Current	18	8	ma.
D-C Grid Current	0.7	0	approx. ma.
Driving Power	0.2	0	approx. watt
Power Output	230	235	approx. watts

◇; ▲; △; □; see next page.

← Indicates a change.

4E27

TRANSMITTING BEAM POWER AMPLIFIER

(continued from preceding page)

◇ Suppressor should be connected to the mid-point of filament circuit operated on a.c., or to the negative end of the filament operated on d.c.

▲ Modulation essentially negative may be used if the positive peak of the audio-frequency envelope does not exceed 115% of the carrier conditions.

Δ Obtained from a separate source, or from the plate-voltage supply with a voltage divider, or through a series resistor of the value shown. Series screen resistor should be used only where 4E27 is employed as buffer amplifier and is not keyed. The screen voltage must not exceed 1500 volts under key-up conditions.

□ Obtained from fixed supply, grid resistor (300000), or cathode resistor (1200, 1800). When a preceding stage is keyed, sufficient fixed bias must be used to maintain the plate current at a low value when the key is up.

Data on operating frequencies for the 4E27/8001 are given on the sheet TRANS. TUBE RATINGS vs FREQUENCY.

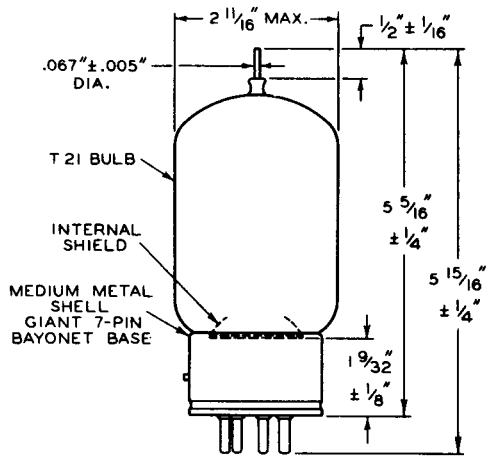

92CM-6260R1

→ Indicates a change.

4E27

AVERAGE PLATE CHARACTERISTICS

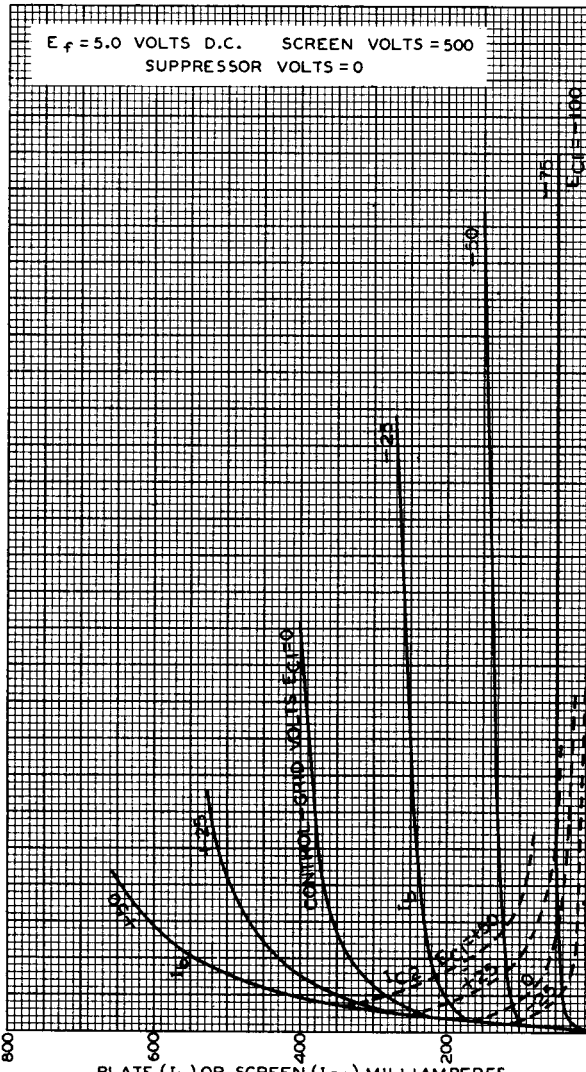

MAR. 26, 1945 RCA VICTOR DIVISION 92CM-6261RI

RADIO CORPORATION OF AMERICA, HARRISON, NEW JERSEY

4E27

4E27

AVERAGE PLATE CHARACTERISTICS

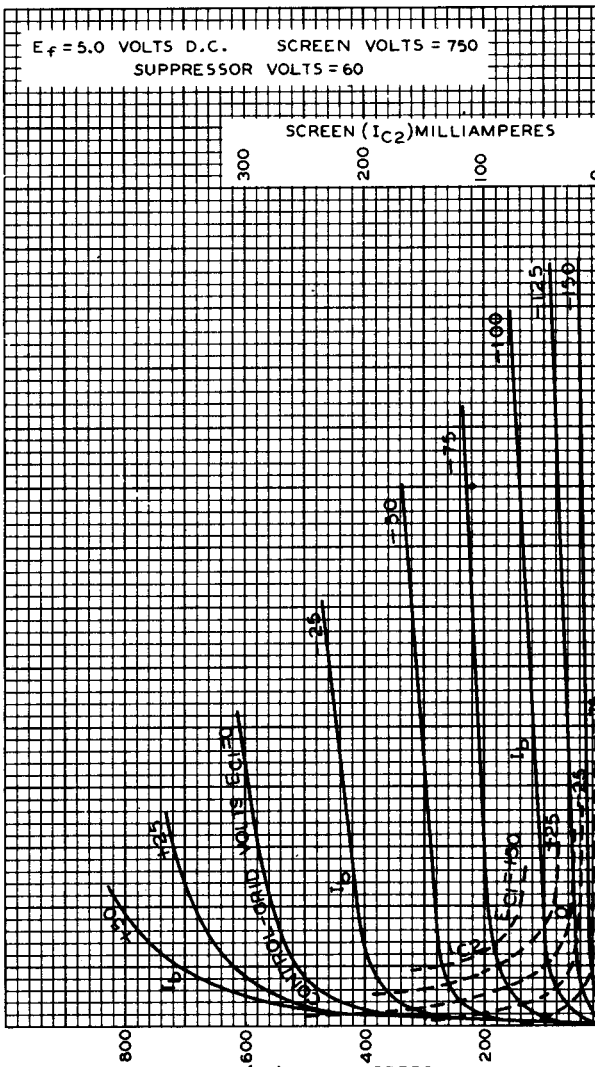

JAN. 22, 1945

RCA VICTOR DIVISION

RADIO CORPORATION OF AMERICA, HARRISON, NEW JERSEY

92CM-6259RI

4E27

TRANSMITTING BEAM POWER AMPLIFIER

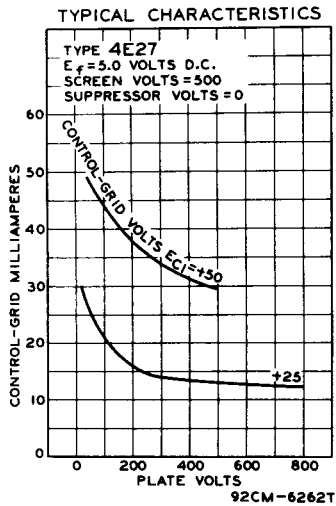

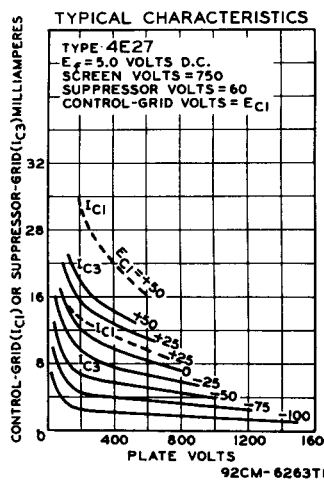

RCA VICTOR DIVISION
RADIO CORPORATION OF AMERICA, HARRISON, NEW JERSEY